PROJECT NAME: _____

LOCATION: _____

ITEM: _____ QTY: _____

MODEL: _____

# SRF-75/80

## TUBE FIRED GAS FRYER

The Sierra all-purpose fryers feature outstanding reliability and durability, capable of cooking a wide variety of fried foods with consistent uniformity and great taste.

Five highly efficient cast iron burners and stainless steel tubes create a large heat transfer area for even heat distribution. Our durable temperature probe senses temperature changes and activates a quick burner response. The temperature for the SRF-75/80 ranges from 200°F (93°C) to 400°F (204°C). Includes Millivolt safety control system.

Every inch of the frypot and cold zone can be cleaned and wiped down by hand. The large cold zone and forward sloping bottom help collect and remove sediment from the frypot to safeguard oil quality and support routine frypot cleaning.

6" swivel casters are optional.
Part #: 119-0021 ( Set of 4, 2 locking and 2 non-locking).

**TUBE FIRED**

Fully peened tank ensures easy cleaning

## STANDARD FEATURES

- 150,000 BTUs/hr.
- Large cold zone area.
- Delivers heat through 6" x 2" 16-gauge stainless steel heat exchange tubes for even heat transfer and rapid temperature recovery.
- Frypot is manufactured from 439 grade stainless steel.
- 1.25" stainless steel full port ball type drain valve.
- Stainless steel door is reinforced for added strength with a heavy duty magnetic door catch.
- Stainless steel front. Galvanized side and back panels.
- Twin fry baskets with plastic coated handles. Stainless steel basket hanger, easily removable for cleaning.
- Robertshaw snap action millivolt thermostat control adjusts from 200°F-400°F. No electrical hook-up required.
- Hi-limit shut-off protector shuts off gas combination valve and standing pilot.
- Built-in flue deflector.
- Nickel-plated tube rack.
- Set of four stainless steel adjustable legs.
- The SRF-75/80 is available for Natural Gas or Liquid Propane installation. Please specify gas when ordering

# TECHNICAL DRAWINGS

** When placing an order, please specify your preferred configuration; for LP (SRF-75/80 LP) or for Natural Gas (SRF-75/80 NG)

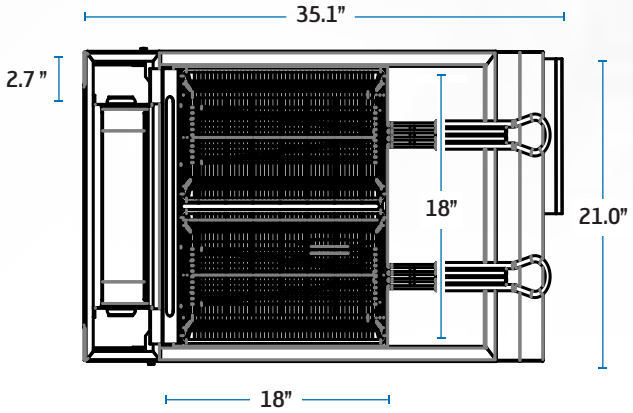


## SPECIFICATIONS
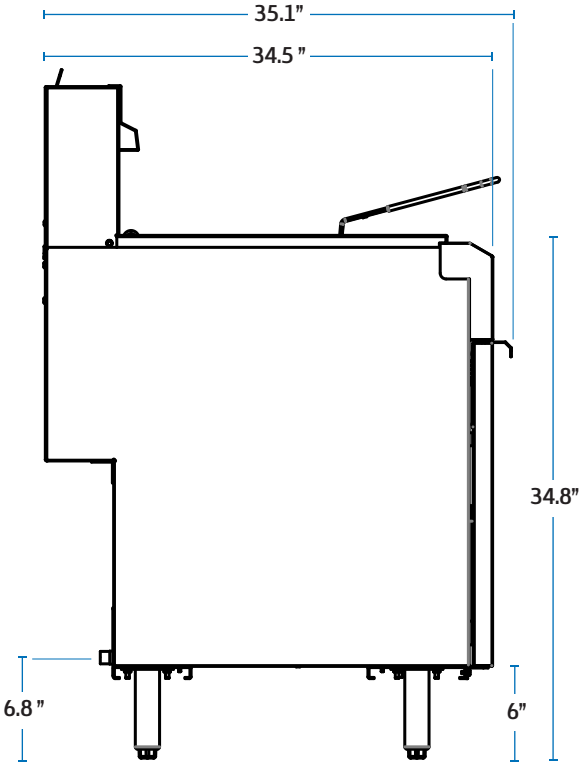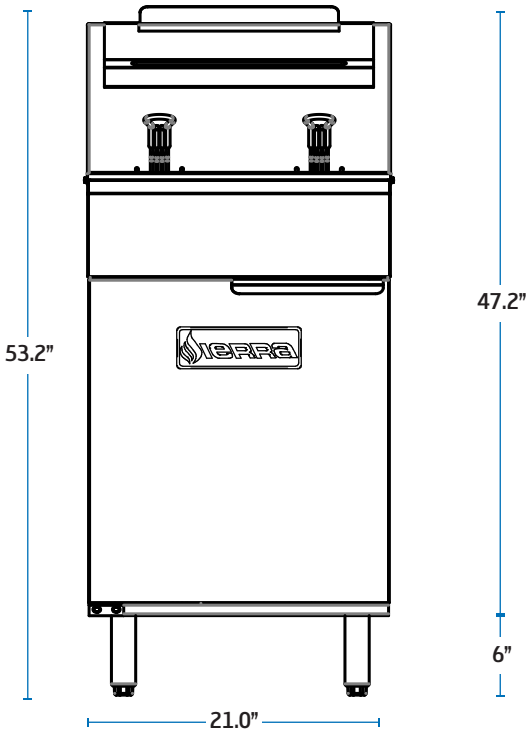
| | |
|---|---|
| MODEL NUMBER | SRF-75/80 (NG OR LP) |
| EXTERNAL DIMENSIONS (WxDxH) INCLUDING HANDLE | 21" x 35.1" x 53.2" |
| NUMBER OF BURNERS | 5 |
| FRYER CAPACITY | 75-80 LBS |
| BTU (EACH BURNER AT 5" W.C) | 30,000 |
| TOTAL BTU | 150,000 |
| NET WEIGHT | 210 LBS |
| SHIPPING WEIGHT | 265 LBS |