Contents

Preface

Thank you very much for your choice of our Single Chamber Vacuum Packing Machine!

The content of this instruction is as following:

- Product Description
- Notice for Security
- Carrying and Storage
- Installation and Commissioning
- Operating Guide
- Maintenance and Repairing
- Troubles and Solutions

This manual introduces the installation and Operation of the product, the following items are included: Carrying, Storage, Installation, Startup, Operating condition, Maintenance, troubles and solutions, and Repairing.

Notice:

- Please read this introduction carefully and get it through before using.
- Make sure this introduction is possessed by the operator or the managerial personnel of this product.
- Please keep this manual after reading and make sure it is touchable for reference in future.
- Any questions please contact the supplier.

Responsibility:

- This instruction is specially edited by great care. The manufacturer is irresponsible for the mistakes or the user's misunderstanding.
- The manufacturer is irresponsible for the damage or problems raised by having not adopted the required spare part.
- The manufacturer has the right to amend the parameter or the spare part no further notice will be given to the buyer.
- The manufacturer has the reserved rights. Don't reprint any part of the instruction without our written agreement.

Terms:

Teflon Cloth: PTFE Coated Fabric. It features High temperature resistance and nonstick.

Heating Broad Assembly: Consist of Aluminum Profile (or epoxy broad), Sealing wire, Teflon cloth, etc.

1. Product Description

1.1 Product Usage

This vacuum packaging machine possesses the advantages of superior function, easy operation, simple maintenance, wide application etc. It applies to the soft packing material such as composite film or aluminum-plastic composite film and so on. It can pack grain, food, fruit, seed, medicine, chemical product, electronic product, precision instrument and meter, rare expensive metal solid etc in liquid, powder or paste shape. The products after packing can be prevented from oxidization, mildew, moth, rot and damp, so quality and freshness is guaranteed to prolong the food's storage period.

1.2 Products Features

- It is easy to operate this machine. The whole procedure, including lowering the synthetic glass vacuum lid, vacuuming, gas-filling (if any), heat-sealing, label printing, cooling, air intake and lifting the vacuum lid, is completed automatically
- Can store 5 working program. Easy for changing packing method.
- The machine possesses oil-mist removing function, so it unnecessary to connect a pipe for exhaust。
- The wide range of the temperature of sealing mouth can be applied to the packing bags with different materials and thickness
- There is an emergent stop switch in the control panel. If any exception in the extracting process, press STOP can interrupt the packing procedure and return to standby state
- There are many sealing type can be choose, the following three below:

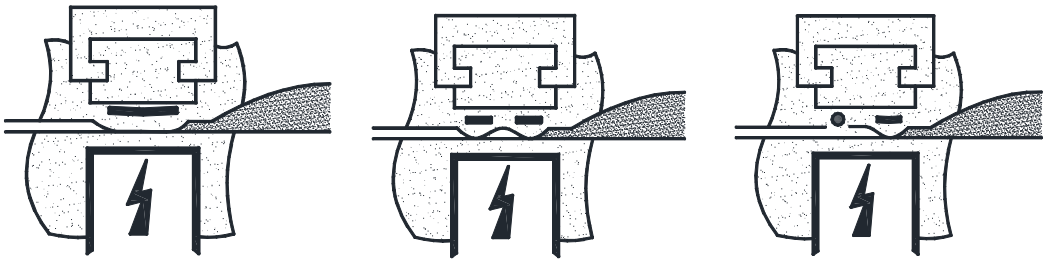

Single sealing 1x10mm or 1x5mm | Double sealing 2x3mm | Cut down the sealing edge 1x3mm or 1x0.8mm

- There are two-side sealing and one-side sealing suitable for different specification package.

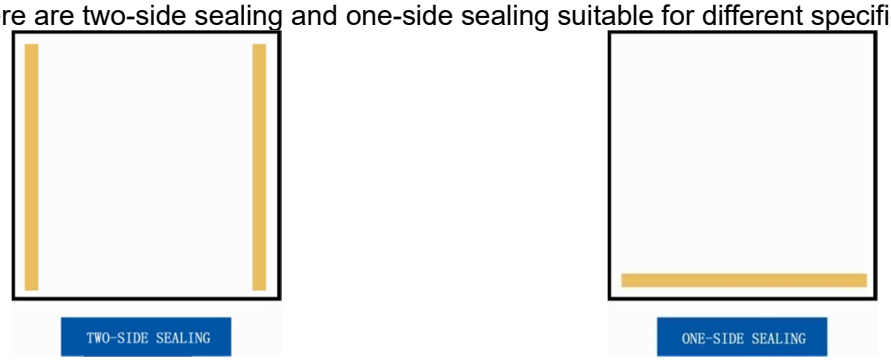

1.3 Operation Principle

Put the bags in the vacuum chamber and lower the vacuum lid. Startup the machine, the vacuum pump runs and will form a vacuum space between the vacuum lid and the vacuum chamber. When the vacuuming finished, fill the gas to the vacuum chamber if it is needed. Then the airbag or the cylinder will force the heating block to lift to hold down the bags in the effect of the pressure difference inside the vacuum chamber and the outside. The flat heating wire in the heating plate will become hot and the seal the bag when it is connected with low-voltage heavy current. Consequently, fill the vacuum chamber with air after cooling down. The whole vacuum packing is completed.

1.5 Main Components

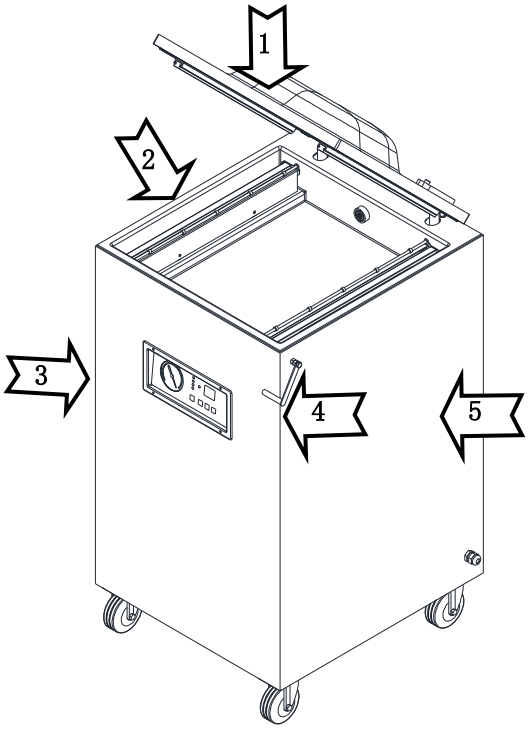

Floor Model Single Chamber Vacuum Packaging Machine

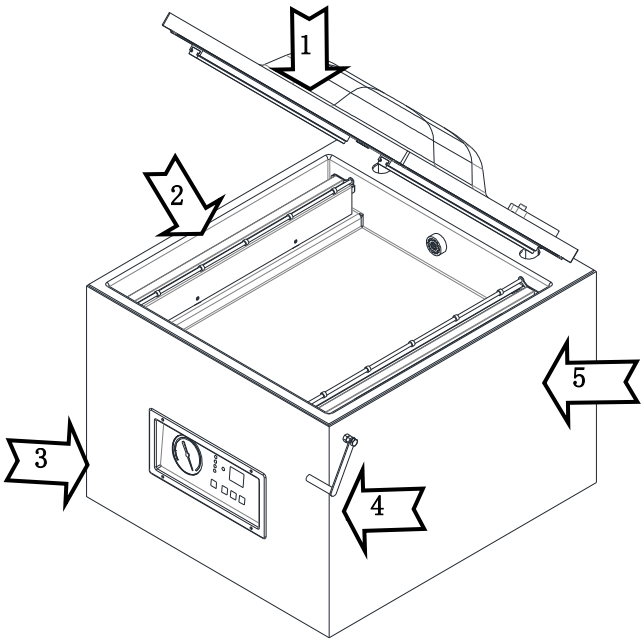

Tabletop Single Chamber Vacuum Packaging Machine

Code	Name	Remark
1	Vacuum Cover	
2	Vacuum Chamber	
3	Control Panel	PC Board
4	Power Switch	
5	Housing	

2. Security

2.1 Preparation:

This instruction is a detailed description of the carrying, storage, installation, startup, working condition, maintenance, troubles and repairing.

It is recommended that the machine be installed by trained professional worker.

Please do abide the maintenance instruction.

- **Please read carefully and understand thoroughly this instruction before the use of the machine.**
- **Any problem please contact the supplier.**

2.2 Notice for Security

- Please check the power voltage and the frequency in case of error. No matter three phases or single phase, the yellow-green wire is the protective grounding wire. Please don't remove.
- Power cord should be placed without pressure or drag and it should be put away when it is not used.
- Don't' operate this machine in a corrosive or dusty environment.
- Don't replace the components at will.
- Keep the machine clean and remove timely the attached dust in the vacuum chamber.
- Cut off the power when the machine is not used.
- Please replace the vacuum pump oil timely.
- Please keep this manual well for reference.
- This machine is produced as per the latest technology and security standard. There maybe danger or damage under improper operation. Please notice the keywords "DANGEROUS", "WARNING", "TAKE CARE".

E.g.:

DANGEROUS!
Ignorance of this notice will lead to damage even fatal accidence.。

WARNING!
Ignorance of this notice will lead to damage even fatal accidence.。

TAKE CARE!
Ignorance of this notice will lead to injury or property loss

2.3 Operating Environment

The design of this product is running under normal temperature indoor. If the environment is in bad condition, such as corrosive atmosphere or temperature over 35℃ or less than 5℃,please contact the manufacturer or the supplier.

The vacuum pump oil can be separated in maximum extent during its running, but not totally separated.

TAKE CARE! UNHEALTHY!

There is residual oil of the exhaust from the vacuum pump. Breathe this gas for long time is not good for health. This product should be placed in a ventilating room.

Please choose the special vacuum pump oil if this machine is used for food industry.

3. Carrying

3.1 with carton packing

If the machine is packed by carton with expanded gasket,

- Remove the expanded gasket from the carton.

If the machine is packed by carton with foam material,

- Remove the foam material from the carton.

3.2 with wooden case packing

If the machine is fixed by screw to the base of the case,

- Unscrew the screw between the machine and the base of the case.

If the machine is fixed by locking belt,

- remove the locking belt

TAKE CARE !
Don't walk, stay or work under the lifting goods.

Note: Please fasten the attached belt or cord to the suitable position of the machine. Pay attention to the gravity of the machine.

- Make sure the cord is safely and tightly fastened to the machine.
- Hang the hanger to the tackle with safe locker.
- Use crane to lift.

Note: Floor-type machine has equipped with caster and it can move in the flat ground. If the caster has locking mechanism, please unlock the mechanism before moving.

TAKE CARE! DAMAGE TO THE MACHINE!

Lean the vacuum pump full of oil will lead much oil into the pump chamber. The vacuum pump may be damaged if there is too much oil when the vacuum pump startup. Don't move the vacuum pump after it is filled with oil.

Note： Please drain the vacuum pump oil before moving the machine.

4. Installation

- Good and reliable protecting ground wire. To ensure the personal safety, please connect the protecting ground wire firmly to the PE terminal of the machine or the appointed position in the ground sign.
- The power should have a breaker controller with leakage protection function.

4.1 The Prerequisite of Installation

Take care! Damage!

If the installation prerequisite can't be reached, the machine will be damaged.
Take care! Injured!

Make sure the installation environment meet the basic security regulation

4.2 Installation Environment

- No inflammable and explosive gases around.
- Temperature: 5-30℃. If the machine will be operated in other environment, please contact the manufacturer or the supplier.
- Environment pressure: standard atmospheric pressure.
- Make sure the Power meet the requirement. (see the name plate in the machine)
- Make sure the machine stands stably. Use foot plate to fix the machine after it is moved to a suitable position. The caster should leave the ground if there is any.
- Make sure the machine is laid in a horizontal position, which is one of the essential of trouble-free operation of the machine.

4.3 Filling Oil

TAKE CARE! DAMAGE!

There is no vacuum pump oil in the newly delivered machine. The vacuum pump works without oil will damage the pump, even in a short time. Please make sure the vacuum pump has filled with the oil before startup.

Note: The vacuum pump should be transported without oil。

PAY ATTENTION!

Filling the oil to the vacuum pump through other position of the pump may damage the vacuum pump. The oil should be filled through the oil filler hole.


TAKE CARE! SCALD!

The oil tank is full with high-temperature and high-press oil mist. The user may get scald by the hot oil mist if the oil filler hole is open. Only when the oil filler plug is unscrewed can the vacuum pump stop running. Please screw the oil filler plug when the vacuum pump is working.

- Unload the back cover.
- Unscrew the oil filler plug with wrench in right size.
- Fill the machine with appropriate special oil for vacuum pump. Please refer to the Chapter 7.3 Special Oil for Vacuum Pump.
- Make sure the oil level is between 1/2 and 3/4 of the oil level indicator.
- Make sure the sealing rubber is installed in the oil filler plug. Replace the ring when needed.
- Screw the oil filler plug.
- Wait for several minutes.
- Check whether the oil level is between 1/2 and 3/4 of the oil level indicator. If it is less than 1/2, please add more.
- If the oil level is between 1/2 and 3/4 of the oil level indicator, fix the back cover.

4.4 Connecting electric

DANGEROUS! ELECTRIC SHOCK!

Please make sure all the plugs have protective ground wire.
TAKE CARE! Unmatched power will damage the machine. Please check the power parameter of the power referring to the label on the machine. Please abide the regulation of safe operation and the national protective measure of accident.

Power/Grounded connection

- Check whether the power voltage is in accordance with the one written in the label of the machine.
- Please exam the turning direction of the vacuum pump when the machine is connected to three phases power.
- Make sure the machine is connected correctly to the grounded plug to avoid fire or electric shock. (The grounded wire is yellowish green.
- The cable should be movable to avoid extrusion.
- Please replace the cable if it is damaged.
- Please cut off the power when the machine is in problem or maintenance.
- Please put the cable away if the machine will be left unused.

If the machine employs single-phase plug:

- Connect the power cord and the machine correctly.
- Connect the other side of the power cord to the wall power socket.

If the machine employs three-phase power:

- Connect the power cord accurately.
- Connect protective ground wire.

TAKE CARE! DAMAGE!

The incorrect turning direction of the vacuum pump motor will damage the vacuum pump in even a short time. Please make sure the turning direction id correct before startup.

For the vacuum pump equipped with three-phase motor:

- Check the turning direction of the vacuum pump according to the instructive mark.

- Turn on the power and lower the vacuum lid slightly to make the vacuum pump running (Refer to the Start Chapter).
- Observe the fan of the vacuum pump motor if possible and determine the turning direction before the fan stops.
- If it is impossible to observe the turning direction, please listen to the sound of the motor. The vacuum pump running in reverse direction will beep. Look at the vacuum gauge as the vacuum pump in reverse direction can't produce vacuum.

If it is necessary to change the turning direction:

- Exchange any two phases of the three-phases power.

4.5 Connecting Gas-filling System (if any)

WARNING! EXPLOSION!

Do not use flammable gas or the combined gas with more than 20% oxygen constitute, or the explosion may occur.

TAKE CARE! DAMAGE!

The pressure of the air supply should not be higher than 0.1Mpa, or the machine may be damaged.

- Do not use flammable gas or the combined gas with high Oxygen constitute, or the explosion may occur. The manufacturer is irresponsible for the accident or damage caused by the violation of this rule.
- The gas tank should be closed correctly. Please close the master switch of the gas tank when no gas-filling or when the machine is unused.
- The value of the pressure valve in the gas tank should be not higher than 0.1Mpa, or the machine may be damaged.
- The diameter of screw ends in the gas-filling tube is 10mm. The screw ends locate in the side or the back of the machine.

If any question about the gas tank please contact the supplier of the gas tank.

Note: When sealing after too much gas filling and vacuum degree more than 0.06mpa, the sealing effect will be unsure or even burnt of teflon cloth.

4.6 Connecting Vacuum System (suitable for external vacuum pump)

If you purchase the machine with built-in vacuum pump, it is unnecessary to follow this step. If you purchase the machine with external vacuum pump, please connect correctly the external vacuum pump

5. Start & Commissioning

5.1 Control Panel

- **Control Panel Introduction**

No.	Figure	Name	Remarks
A		Monitor	Shows the state of the functions during the working and the numbers will diminish. Shows numbers of the parameter value of the selected function. Shows “□ □”for standby state Shows “E d” when the program is finished.
B		Emergent Stop	It is used to end the program. The emergent switch can be pressed in any time to stop running. The machine will stop all the working when this button is pressed, Skipping to the deflating function and the vacuum lid will open automatically.
C		Function Select	It is used to choose a function, like vacuuming, gas-filling, sealing and cooling, or to change the relative parameter. When one function is selected, the indicator on the left side will light.
D		Up adjustment	The parameter of the selected function will increase by one unit every time this button is pressed.
E		Down adjustment	The parameter of the selected function will decrease by one unit every time this button is pressed. Press this button and not loose, the value will decrease by about 5 units.
F		**Program choose**	Choose program from the 5 in store. Press one time then it shows the current program code such as “P1”. Press again in one second to shift the program from P1 to P5 by circle. When release the button, it will adjust to be the chosen program accordingly
G	WORKING	Working indicator	The indicator lights (red) during the working period.

H		Function indicator	The corresponding indicator will light when one function is executed during the working period. When the Function Select button choose one function, the corresponding indicator will light (red).
I	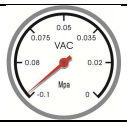	Vacuum gauge	Shows the pressure value in the vacuum chamber.

5.2 Power on

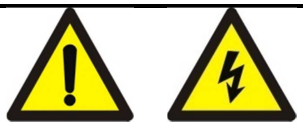

DANGEROUS! ELECTRONIC SHOCK!

Please obey the safe operation rules.

- Start the machine by turning or pressing the Power Switch.
- After the power is turn on, the indicator of the machine shows the version firstly like "**A.1**", then it will show "□ □", which indicates the machine is in the standby state and it can be used.

Note: The machine will suction in the situation of cover closed and then open the cover when connected with power.

5.3 Check the turning direction of the motor (For the vacuum pump equipped with three-phase motor)

TAKE CARE! DAMAGE!

The incorrect turning direction of the vacuum pump motor will damage the vacuum pump in even a short time. Please make sure the turning direction id correct before startup.

For the machine adopting three phases power, there is a built-in vacuum pump or a power connector for connecting vacuum pump. The vacuum pump may be damaged if the turning direction of the vacuum pump is incorrect. Please make sure the turning direction is in the right way.

- Check the turning direction of the vacuum pump according to the instructive mark.
- Turn on the power and lower the vacuum lid slightly to make the vacuum pump running (Refer to the Start Chapter).
- Observe the fan of the vacuum pump motor if possible and determine the turning direction before the fan stops.
- If it is impossible to observe the turning direction, please listen to the sound of the motor. The vacuum pump running in reverse direction will beep. Look at the vacuum gauge as the vacuum pump in reverse direction can't produce vacuum.

If it is necessary to change the turning direction:

- Exchange any two phases of the three-phases power.

6. Standard Operation and Parameter Setting

TAKE CARE! INJURED!

Please operate according to this manual.
Don't remove the necessary guard cover or housing.

TAKE CARE! UNHEALTHY!

There is resin exist in the exhaust from the vacuum pump. Breathe the gas for long time is unhealthy. The machine should be used in a ventilating room.

TAKE CARE! SCALD!

The heating block can reach to the high temperature of more than 200℃ when it is heating. Even after cooling, it is still in a high temperature.

- Don't pack the goods that may be damaged when vacuuming or after vacuuming with this machine.
- If you have any question about the operation and the function that haven't offered in this manual, please contact the manufacturer or the supplier.
- If the machine is running irregularly or make strange noise, please turn off the power immediately, stop the running and finally cut off the power.
- Once there is any problem, please contact the manufacturer or the supplier.

6.1 Standard Operation

- Turn on the power switch to startup and the screen shows "□□".
- Please employ the compound bag suitable for vacuum packing and the bags should be sterilized before packing foods.
- Put the products in the bags. Choose the proper bags for the products. Don't choose the oversize bags. Ensure a clean environment during the operation. The packing materials and the hands are better to be dry.
- Place the bag in the vacuum chamber or on the base plate (if any). The bag mouth should be placed on the heating block or the silicon strip. If the bag is lower than the heating block or the silicon strip, please insert the base plate (if any) included of the machine, which can make the operation simple and the cycle time short.
- As to the gas-filling system, please cover the bag mouth on the gas-filling connector.
- Several bags can be placed simultaneously on the heating block or the silicon strip as long as the heating block or the strip is longer than the bags. Bags can't be stacked. If the machine has more than one silicon strip, these strips can be used simultaneously.
- Set correct parameter for the vacuum and sealing function. Please refer to Control Panel section.
- Close the vacuum lid and the machine can complete the whole program, including vacuuming, gas-filling (if any), sealing and cooling. The vacuum lid will open automatically when the last deflating finishes.

- Remove the bags from the machine after the cycle is finished.
- Press Emergent Switch to stop the working if necessary, then the machine will stop running and deflates immediately. The vacuum lid opens automatically.
- Circulate as the above.

Note: The vacuum lid can't be open automatically when there is power cut or other accidents. The machine will execute the deflation function as soon as the electricity is reconnected and the vacuum lid will open automatically.
Note: If the machine stands in high altitude, the atmospheric pressure will decrease and the value in the vacuum pressure gauge will reduce accordingly.

6.2 instruction of controlling Program's cycle

- **Controlling process instruction**

No.	Process	Remarks
1	Standby	■ In standby state, it shows"□□",
2	Close the vacuum lid	■ Closed the vacuum lid then the machine starts to work. ■ The indicator lights.
3	Vacuuming	■ The machine begins to vacuum to extract the air in the vacuum chamber. ■ The indicator in front of vacuuming lights. ■ The monitor: the value decrease second by second from the set time (maximum 99s). ■ The pointer of the vacuum gauge shifts slowly t0 left side.
4	Gas-filling (if any)	■ The gas-filling begins and fills gases to the bags as soon as the vacuuming finishes. ■ The indicator in front of Gas-filling lights. ■ The monitor: the value decrease by 0.1 second each time from the set time (maximum 9.9s). ■ The pointer of the vacuum gauge shifts slowly to right side.
5	Sealing	■ The sealing begins as soon as the vacuuming and gas-filling finish. ■ The indicator in front of sealing lights. ■ The monitor: the value decrease by 0.1 second each time from the set time (maximum 6.0s). ■ The pointer of the vacuum gauge keeps stay.
6	Cooling	■ The cooling begins and cool the sealed bags as soon as the sealing is completed. ■ The indicator in front of Cooling lights. ■ The monitor: the value decrease by 0.1 second each time from the set time (maximum 9.9s). ■ The pointer of the vacuum gauge keeps stay.
7	Deflating	■ The deflating begins as soon as the cooling is completed. The air comes into the chamber and the pressure inside the chamber is equal to the outside. The vacuum lid will open automatically. ■ Monitor: shows "□ □" ■ The pointer of the vacuum gauge shifts to right dramatically.
8	Complement	■ The pointer of the vacuum gauge return to the 0 position and the vacuum lid opens automatically. ■ Monitor: shows "E d", indicating the cycle is completed. ■ The products are packed well.

Note: The pointer of the vacuum gauge may shift slightly when the sealing just begins, which is not the mechanical failure.

6.3 Parameter Setting

TAKE CARE! DAMAGE!

Unreasonable parameter setting may damage the machine or shorten the service time.

- Unreasonable parameter setting may damage the machine or shorten the service time.
- The whole program or the sealing may not be completed correctly because of unreasonable parameter setting
- If you have any question about the operation and the function of the machine, please contact the supplier.

Note: The parameter can be set and program can be shift only when the machine stops running and showing"□ □"

- **Choose of program in panel:**

Machine can store 5 working program with individual code(P1,P2,P3,P4,P5). You can save the frequent program and then choose it rapidly when you want to change the packing method.

You can choose different program by grogram button

1		Press one time then it shows the current program code such as "P1" . Press again in one second to shift the program from P1 to P5 in circle. When release the button, it will adjust to be the chosen program accordingly

- **Parameter setting of the program:**

No.	Figure	Operation	Monitor
1	Startup	Start the machine and wait for the situation of standby	Shows "**E d**"。
2		Choose the function by pressing Function Select button. Press once to choose next function.	
3		When one function is selected, the corresponding indicator lights (red). Four functions is respectively vacuuming time, gas-filling time（If any）, sealing time, and cooling time.	Shows the set value of the selected function.
4		Press once to increase or decrease unit of the selected function time. Press the button and not loose, the value will increase or decrease by 2 units every second. Press the button long time can make the value increase rapidly	Shows the set value of the selected function.
5		Press once or several times the function select button until all the indicator light out and the machine will save all the parameters.	Shows "**E d**"。

Note: If closed the vacuum cover when you adjust the parameter, the machine will save the current parameter and startup.

Note: Every setting for the parameter will revised based on the current program. The current program code can be showed by program button.

Note: The sealing time should be adjusted from short to long to search the optical parameter. Too long sealing time make the temperature of heating block beyond the limitation and heating block broken. Normally the sealing time will be no bigger than 3 seconds.

The adjustment range of these functions:

Function	Parameter range	Adjusting range	Unit
Vacuuming	0～99	1	Second
Gas-filling	0～9.9	0.1	Second
Sealing	0～6.0	0.1	Second
Cooling	0～9.9	0.1	Second

6.4 Optimal parameter

- The vacuumizing time should be determined by the quantity and the size of the materials in the vacuum chamber. Usually the vacuumizing time can be set as 20-40s.
- The sealing function may not be completed if sealing starts when the vacuum level has not down to less than 0.06Mpa.
- Prolong properly the vacuuming time for special products, such as liquid or the products consisting of much water.
- The gas-filling time (if any) should be set according with the practical condition.
- If the chamber is overfilled, the vacuum lid will open automatically and the program will stop.
- If the sealing starts when the vacuum level reach to 0.06Mpa for overfilled gas, the sealing may not be completed regularly, even burnt of teflon cloth.
- The sealing time can be set between 1-3 seconds.
- Note: Too long sealing time will shorten the heating block and the silicon's service time as the heating block will heat dramatically.
- The sealing function parameter is essential to the quality of the sealing; the temperature should be adjusted slowly from low to high.
- The cooling time can be set between 1-3 seconds according to the thickness of the bags.

6.5 Packing Liquid Products

- The machine is suitable to pack liquid products, such as soup and sauce. Lean the machine properly when pack these kinds of products.
- The temperature of the liquid will goes up to the boiling point when in a certain low pressure or high temperature. The liquid product with high temperature will soon goes up to the boiling point and the vacuum degree will be lower.
- It is suggested the liquid products be cooled down before packing to ensure the optimal vacuum degree.

The following blank shows the boiling point, temperature and pressure of the water.

Vacuum Pressure [MBAR]	1000	800	600	400	200	100	50	20	10	5	2
Boiling Point [℃]	100	94	86	76	60	45	33	18	7	-2	-13

6.6 Optimal packing

- Employ good quality vacuum bag in correct style.
- Leave enough space on the bag mouth, at least 30mm.
- Place the vacuum bag neat on the heating block or the silicon strip.
- If the bags are much lower than the heating block or the silicon strip, please insert proper base plates (if any).

7. Maintenance

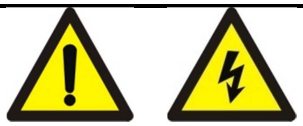

WARNING! ELECTRIC SHOCK!

Cut off the power when maintain the machine.

The daily maintenance is necessary to prolong the service time, avoid mechanical failure and get the optimal packing effect. If the machine is frequently used (more than 8 hours a day), it is suggested to do professional maintenance every 6 months. If the machine is used for less than 8 hours a day, the maintenance can be acted once every year. (The time can be adjusted as per the environment and the product.)

However, the partial maintenance should be often acted by the user. The following is the general introduction.

- Cut off the power supply before maintenance. Pull the plug from the socket in the wall.
- If the machine runs irregularly or makes strange noise, please cut off the power immediately and contact the manufacturer or the supplier.
- Please clean the vacuum lid with solvent-free detergent. Exam at least once every week the vacuum lid whether it fractures. If there is any breakage, please stop using the machine
- Don’t wash the machine by high pressure cleaning, which will damage the electronic device and other spare parts.
- Don’t let the water enter to the extracting opening or the exhaust hole of the vacuum pump, or the vacuum pump may be damaged and can’t be restored.
- Non-professionals please don’t act the major maintenance.
- Move or transport the machine in an upright horizontal state. Leaning the machine may damage the vacuum pump.
- The machine works at most 8 hours in a day. The manufacturer is irresponsible if the user prolongs the working hour of the machine without authorization and damage the machine.

If the machine is damaged or in problem as the user maintains the machine without the instruction in this manual, the manufacturer is irresponsible for the problems.

7.1 Standard Maintenance Schedule

Cycle	Maintenance
Daily	● Clean the vacuum chamber, vacuum lid and housing with wet cloth and remove the foreign materials attached on the heating block. ● The cleaner should be solvent-free. ● Don’t use high pressure cleaner.
Weekly	● Check the oil level and the quality. If there is not enough oil or the oil goes off, please add oil or replace the oil. ● Check whether the heating block is damaged. Please replace the Teflon cloth /the flat heating wire when the sealing go bad or the Teflon cloth/flat heating wire is not attached to the heating block. ● Check the sealing rubber of the vacuum chamber. Replace it in time if the rings is damaged or stretched. ● Check whether the vacuum lid cracks. Please stop using the

	machine of the lid is broken.
Six months	● Check whether the vacuum filter is saturated. If it is, please replace the filter. ● Replace at least once the vacuum pump oil every six months.
Three years	● Replace the transparent lid. ● Replace the sealing airbag or the cylinder.

7.2 Vacuum pump maintenance（Take XDZ-020vacuum pump as example）

- The daily maintenance of the vacuum pump is essential to prolong the service time and ensure correct operation.
- It is suggested to exam all-round the vacuum pump at least once every year if the machine is used frequently. Any question or suggestions please contact the manufacturer or the supplier.

Filling and replacing oil

TAKE CARE! POLLUTION!

Please deal with the waste oil according to the environmental regulations.

TAKE CARE! SCALD!

The surface temperature of the vacuum pump will rise to more than 70℃ when it is running.
Don't touch the vacuum pump during its working. If it is necessary to touch, please stop the running, cool it down or wear thermal protective glove.

- There is no vacuum pump oil of the newly delivered machine. Please fill the oil for its first use.
- **Check the color of the vacuum pump oil.**
  The vacuum pump oil is bright and clear without any foam or muddle. If there are white materials after the precipitation, it indicates there are foreign materials in the oil. Please do replace the blackened vacuum pump oil or the oil with foreign materials.
- **The service time of the vacuum pump oil**
  The service time of the vacuum pump oil depends on its working environment. To extract clean and dry gas, the vacuum pump oil should be replaced every 500 working hours or every six months.
- **It is suggested to replace the vacuum pump oil mist filter at the same time when replacing vacuum pump oil.**

Keep the pump running for several minutes before replacing to get a proper temperature of the oil and the pump, so that the wet air and the impurities can be better absorbed and filtered. High temperature will volatilize the wet air in the pump so as to reduce the rust.

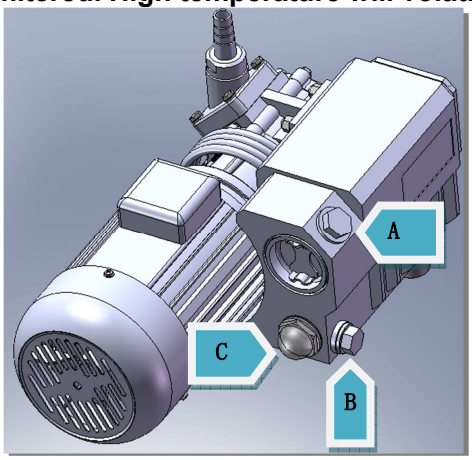

A：Oil-filling hole
B：Oil-drain hole
C：Oil level indicator

Replacing oil

- Open the back cover.
- Place a basin for oil under the oil-drain hole.
- Unscrew the oil-drain plug with wrench in correct size.
- Drain the oil.
- Put the oil-drain plug back after oil-drain.
- Dispose the waste oil as the environmental protection law regulates.

Note: When you unscrew the oil-drain plug, the oil flow through the oil-drain hole, so there should be a basin for oil. At the end of the oil-drain, please lean the machine slightly so that the residual oil can flow away.

Filling oil:

TAKE CARE! DAMAGE!

Correct oil type and quantity is essential to the vacuum pump. Incorrect vacuum pump oil or overfilled oil will damage the vacuum pump.

- The newly delivered machine should be filled with oil.
- Fill the oil after the oil-drain or when the oil level descends.
- Unscrew the oil-filling plug with wrench in correct size.
- Fill the machine with appropriate special oil for vacuum pump. Please refer to the Special Oil for Vacuum Pump section.
- Make sure the oil level is between 1/2 and 3/4 of the oil level indicator.
- Make sure the sealing rubber is installed in the oil filler plug. Replace the ring when needed.
- Screw the oil filler plug.
- Wait for several minutes.
- Check whether the oil level is between 1/2 and 3/4 of the oil level indicator. If it is less than 1/2, please add more.
- If the oil level is between 1/2 and 3/4 of the oil level indicator, fix the back cover.
- Check weekly the oil level. If it is less than 1/2, please add more.

Replacing filter

TAKE CARE! POLLUTION!

The polluted filter should be disposed separately from other wastes according to the regulation.

There are one or several filters in the vacuum pump, which is used to absorb and filter the oil mist. The filter will turn wet (saturated) and need replacement. The machine can’t reach to the maximum vacuum level if the filter is saturated.

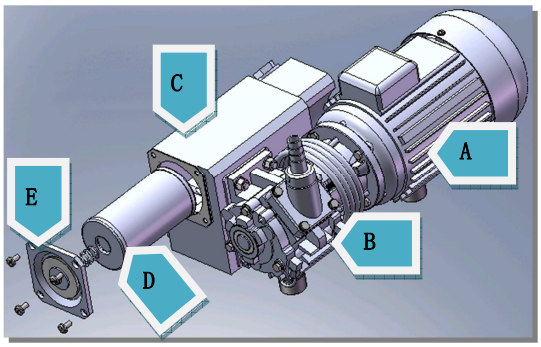

A： motor
B：Pump body
C：Oil tank
D：Oil-mist filter
E ：Filter cover

- It is suggested to replace the filter at the same with the vacuum pump oil. The filter locates on the way of the vacuum exhaust pipe.
- The normal maintenance cycle of the oil-mist filter is between 6-12 months.

Replacing the oil-mist filter

- Open the back cover of the machine and find the oil-mist filter.
- Unscrew four bolts on the filter cover and take out the filter cover and the spring.
- Remove the old oil-mist filter and replace a new one.
- Reinstall the spring and the filter cover.
- Install the back cover to the housing.
- Dispose the wasted oil mist filter following the environmental laws.

7.3 Special oil for vacuum pump

The temperature of the working environment is important for the choice of the oil type. The following table lists the relationship among the working temperature, oil quantity and oil type.
There are two suggested brand for the oil: Shell Vitrea, Great Wall special oil for vacuum pump.

Vacuum pump oil	VM32	VM68	VM100
Viscosity level ISO-VG	32	68	100
Applicable temperature (℃)	<5	5-20	12-30
Dosage（L）	0.3		

Note:

- If the oil applicable for low temperature is used under high temperature, the abrasion between the vacuum pump blade and the pump body will be aggravate and affect the service time of the vacuum pump.
- If the machine is not used under normal environmental temperature, please contact the manufacturer or the supplier.

7.4 Replace Teflon cloth and flat heating wire

TAKE CARE! SCALD!

The surface temperature of the heating block will rise to more than 200℃ when heated. Even cool it down, there is still high temperature.

WARNING！DAMAGE！

The width, thickness and the material for the replacement sealing wire should be the same as the sealing wire on the original heating board. Or please change the sealing wire on all the heating board to the same specification.

- The quality of the sealing, in some extent, depends on the maintenance of the heating block and the silicon strip.
- Daily maintenance: Clean the heating block and the silicon strip with wet cloth. Exam the heating block and the silicon strip weekly. Replace the flat heating wire, Teflon cloth or the silicon strip if the heating block is not flat or the sealing is not good.

The average maintenance cycle of the teflon cloth and the flat heating wire is at least once every three months. (The prerequisite is the machine is used for packing standard products with standard vacuum packing material.)

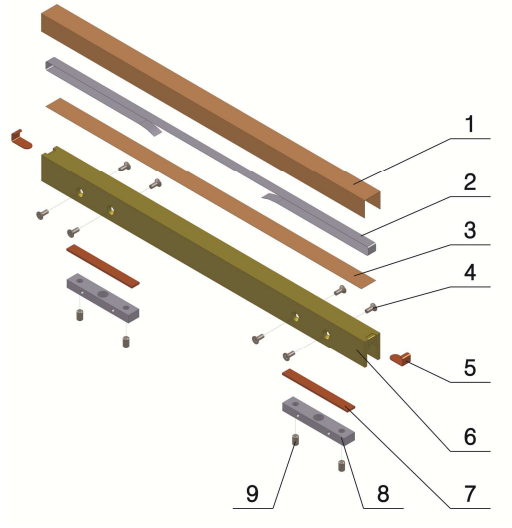

1. **Teflon Cloth**
2. **Flat Heating Wire**
3. **Heating Plate Subplate (Teflon Cloth)**
4. **Countersunk blot**
5. **Copper subplate for heating Wire**
6. **Heating Plate**
7. **Fixed block for Epoxy Plate guiding pillar**
8. **Copper clamp plate for heating Wire**
9. **Tighten blot**

- Remove the heating plate from the chamber
- Remove the Teflon cloth on the heating plate
- If it is for replacing only the Teflon cloth, wipe the grease away with a clean cloth, then stick the new Teflon cloth to the heating plate.
- Unscrew the bolt of the fixed block for epoxy plate guiding pillar.
- Pull out the copper clamp plate for heating wire.
- Pull out the flat heating wire.
- Remove the other side of the heating plate with the same method.
- Remove the old heating plate subplate(Teflon Cloth) under the heating wire.
- Wipe the grease on heating plate away with a clean cloth.
- Put the new heating plate subplate(Teflon Cloth) to the heating plate.
- Cut a new segment of flat heating wire, whose length is 15cm more than the heating plate.。
- Insert one side of the flat heating wire through the trough of the heating plate fixed seat, reinsert the copper sheet and fasten the bolt.
- Pull the other side of the flat heating wire out from the trough on the other side of the heating plate fixed seat.
- Fasten the flat heating wire with special fasten device. Simultaneously, insert the copper sheet and screw the bolt. Make sure the flat heating wire is fastened straight before screwing the bolt.
- Cut out the unnecessary flat heating wire of the copper sheet.
- Stick a new segment of Teflon cloth to the new flat heating wire smoothly.
- Put the heating plate back to the machine.

7.5 Replacing silicon strip

Check weekly whether the silicon strip is coarse. Replace the silicon strip once it is not flat.

- **The average maintenance cycle of the silicon is at least once every 6 months.**

- The silicon strip is blocked in the silicon strip support and it can be removed directly
- Remove the old silicon strip from the silicon strip support.
- Cut a new silicon strip in the same length with the old one
- Put the new silicon strip in the silicon strip support.
- The silicon strip should be placed smoothly in the silicon strip support. The flat silicon strip is important, which should be with no tension.

Note: One side of the silicon strip is reticulate pattern, and the other is reticulate pattern with fixed holes. It can be installed with character, which is used to print label. Choose the side as your needs.

7.6 Replacing sealing rubber

The sealing rubber keeps the vacuum chamber sealed during its working, which is essential to get the needed vacuum level. The sealing rubber will wear out for different pressure. Please replace it at regular intervals.

Check the sealing rubber weekly at least to see whether it is worn or broken.

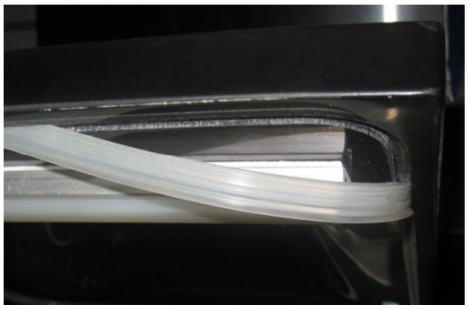

- The sealing rubber is blocked in the vacuum chamber trough and it can be remove directly.
- Please measure the length of the new sealing rubber based on the old one. The lid can’t be closed or may leak for too short/long ring.
- Put the new sealing rubber in the vacuum chamber trough.
- The sealing rubber should be placed smoothly without any tension.

8. Troubles And Solutions

8.1 Troubles and solutions of the machine body

Troubles	Reasons	Solutions
The machine doesn't work and the control panel shows nothing.	No connection of the power supply.	Put the power plug to the power socket.
	The fuse of the main circuit burns out.	Replace the fuse (same specification).
	The contact of the power switch looses.	Exam, fasten, repair or replace.
The control panel startup, but the machine doesn't work.	The micro switch of the vacuum lid is in wrong position or damaged	Adjust or replace the micro switch.
	Internal failure of the machine.	Contact the supplier.
The vacuum lid can't open automatically.	The gas spring or the tension spring fails.	Exam, repair or replace.
The best vacuum state can't be achieved. The vacuuming speed is slow.	Incorrect pump turning direction.	Correct the turning direction.(three phases power)
	Short vacuuming time.	Prolong the vacuuming time.
	Insufficient oil or dirty oil	Exam the oil level or replace the oil.(pay attention to the oil type and the volume)
	Pipe leakage.	Replace it.
	Pipe contact looses.	Exam and fasten it.
	The airbag or the cylinder leaks.	Exam and fasten it.
	Air leakage or abrasive sealing rubber.	Replace the sealing rubber.
	Oil-mist filter is saturated.	Replace the oil-mist filter.
Sealing failure or poor sealing.	The bags are not correctly placed on the heating plates.	Place the bags on the heating plate in order.
	Too long/short sealing time.	Shorten/prolong the sealing time.
	Inappropriate heating temperature.	Choose proper temperature.
	Silicon strip damaged or with impurity.	Clean or replace the silicon rubber.
	Teflon cloth damaged or with impurity.	Clean or replace the Teflon cloth.
	The inner side of the bag mouth is unclean.	Clean the bag mouth.
Gas-filling failure or poor gas-filling (if any)	Too long/short filling time.	Shorten/prolong the filling time.
	The air tank is or nearly empty.	Replace air tank.
	Air tank closed.	Open the valve.
	Incorrect setting of the filling pressure.	Check whether the pressure gauge or the secondary pressure is set as 1 atmospheric pressure (1-ATM). Warning! The compound gas can't be higher than 1-ATM anytime.
Normal vacuum level, but remain residual gas in the bag.	Poor reposition of the heating plate. The distance between the heating plate and the silicon strip is too long/short.	Repair the heating plate and make it good reposition and flexible. Adjust the distance.
Suddenly stop vacuuming during vacuuming process	Broken PCB	Replace PCB
	Poor connection of the switch	Adjust the position of switch

The heating element of heating plate is burned	Short circuit of the relay	Replace the relay

8.2 Troubles and solutions of the vacuum pump

Troubles	Reasons	Solutions
Starting current or the working is too high.	Overflowing pump oil or incorrect oil type.	Check the oil level and type.
	Excessive viscidity when in low temperature.	Replace the proper pump oil.
	Exhaust filter blockage.	Clean or replace the filter.
The pump overheats during working.	Overflowing/insufficient oil.	Exam and adjust the oil level.
	Poor heat dissipating.	Clean the blade of the radiating pump and the motor to improve the ventilation.
Strange noise during working	Driving components wears out or loose.	Find out the broken parts and repair.
	Incorrect turning direction.	Correct the direction (three phases power)
Vent smoking or exhausting oil drip	Overflowing pump oil	Let the excessive oil out.
	Exhaust filter installed in the inaccurate position or the material breaks.	Reinstall or replace the exhaust filter.
	Exhaust filter blockage.	Clean or replace the filter.
Oil leaks in the vacuum pump	Small particles stick to the vane	Rotate the pump counterclockwise for 10 seconds, drain oil and then add new oil. Repeat this procedure until back to normal. Or contact supplier.

8.3 Troubles and solutions of the valve

Troubles	Reasons	Solutions
Poor sealing	Impurity attached to the sealing area	Clear up
	Sealing side damaged	Repair or replace
	Sealing rubber damaged	Replace
Valve can’t open and closed flexibly.	Control fuse burn out.	Replace
	Poor contact of cord.	Repair
	silicon rectifier diode breakdown	Replace
	Coil burnout	Replace
	The lifting part of the Armature iron has contaminants.	Replace
	Blocked spring caused by rust or breakage	Replace
	Too low voltage	Check the power voltage

8.4 Troubles and solutions of the sealing device

Troubles	Reasons	Solutions
Sealing failure	Too long/short sealing time	Shorten/prolong the sealing time
	Sealing before the vacuum level is achieved.	Check whether the vacuum is not higher than 0.6mpa.
	Flat heating wire damage	Replace
	Heating transformer damage	Replace
	Sealing contact failure	Repair or replace
	Heat-sealing valve failure	Repair or replace

	Blocked heat-sealing strip	Repair
Poor sealing	Silicon strip damage or foreign matter attached	Clean or replace the silicon rubber
	Teflon cloth damage or	Clean or replace the Teflon cloth
	The inner side of the bag mouth is unclean.	Clean the bag mouth.
	Loose flat heating wire	Fasten
	Short cooling time	Adjust
	Improper temperature	Choose the proper temperature

8.5 Error code

There is one or more error codes in control system program which offer clearly indication to prevent broken when the machine cannot work.

F1 Alarm:

Alarm Performance: The display shows F1 and twinkle.

Situation: Aerating solenoid valve is energized for more than 15 seconds, but the vacuum lid is still closed.

Possible reasons：

- The pneumatic spring or tension spring of vacuum lid is broken

  In this situation, the vacuum lid cannot open automatically, so the aerating can’t finish automatically.

Solution: replace or adjust the pneumatic spring. In this case, gently lift the vacuum lid after every aerating then the machine can continue to work.

- aerating solenoid valve broken

  In this situation, the vacuum lid cannot open automatically, so the aerating can’t finish automatically.

Solution: Replace or repair the aerating solenoid valve.

- Approaching switch broken or its position is incorrect

  Approaching switch broken or its position is incorrect, so the aerating can’t finish automatically.

Solution: Replace or repair the approaching switch.

Note: the correct approaching switch position should be: When closed the vacuum lid in the position where 10-20mm distance from vacuum chamber, there is signal in approaching switch and machine startup.

If there is frequent error code showing or direct malfunction, please contact the manufacturer or distributor.

10. Storage

10.1 Storage in short time

- Power off, unplug the power and put the power cord away.
- Close the vacuum lid and fix it with hook.
- Cover the machine with plastic bags in case of dusts if possible.
- Store the machine in a dry, dustless and shockproof room.

10.2 Storage in a long time

The internal of the machine has its anticorrosion treatment before it leave the factory, so there is no need to treat it with preventive oil. You can use the preventive oil if it is stored in bad condition, such as corrosive atmospheric environment, overheat or frequent changes of temperature. If any questions, please consult the manufacturer or the supplier.

- Power off, unplug the power and put the power cord away.
- Close the vacuum lid and fix it with hook.
- Cover the machine with plastic bags in case of dusts if possible.
- Keep the original package if possible.
- Store the machine in a dry, dustless and shockproof room.

10.3 Restart after Storage

Operate according to the statement in the INSTALLATION and START chapter.

11. Schematic Diagram Of Electric

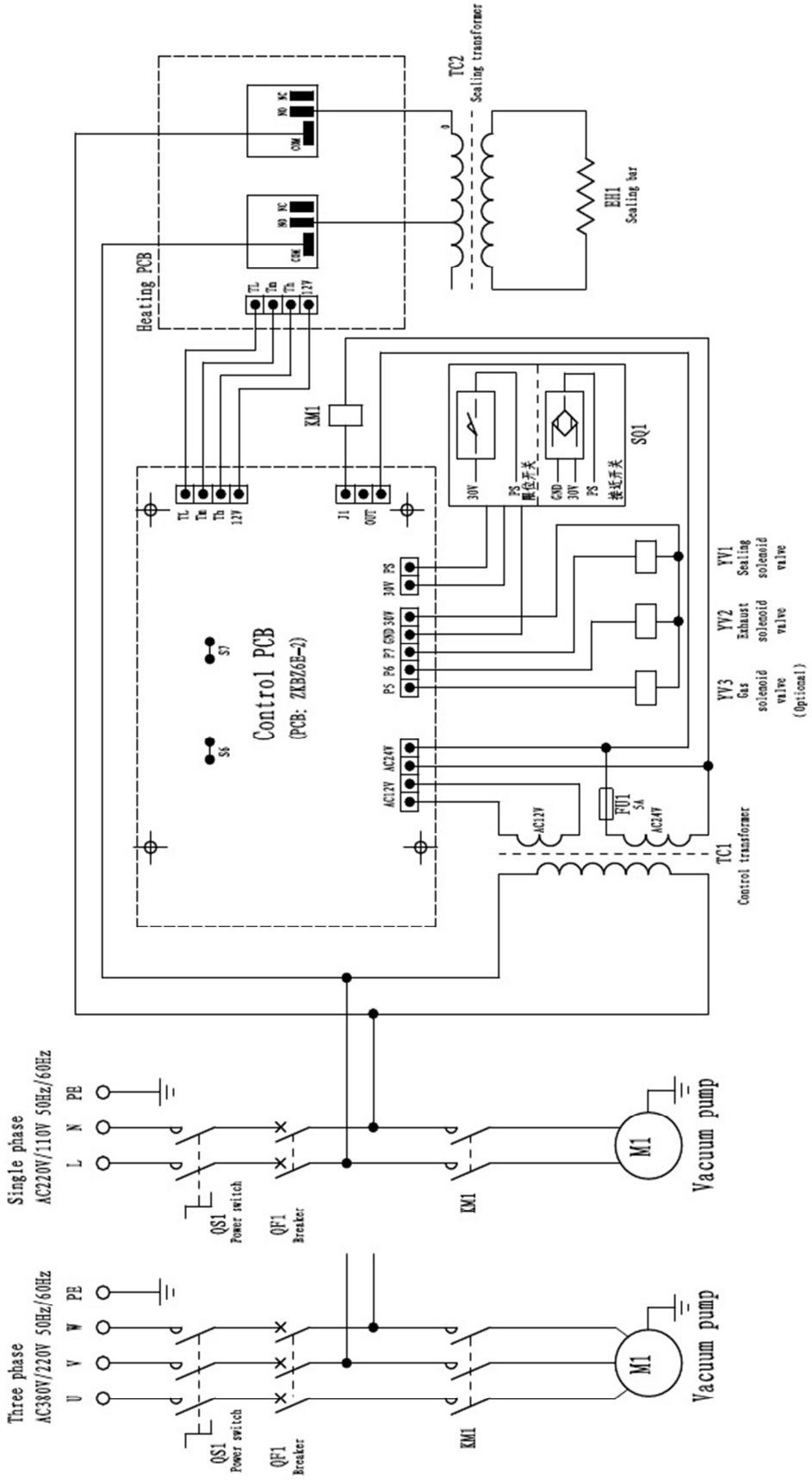

12. Schematic Diagram Of Gas circuit